ST 01.2 - FRAME STUDY

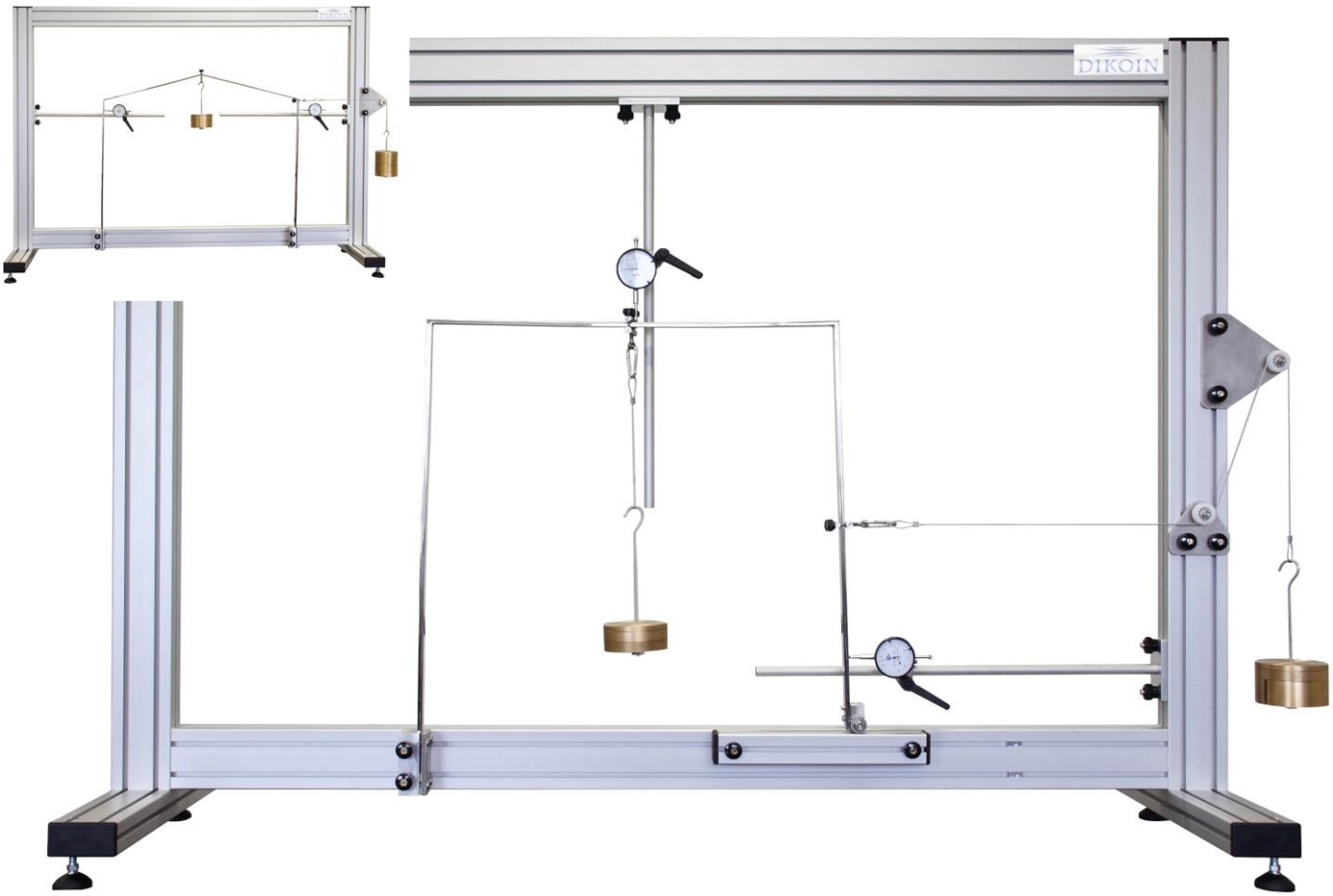

This equipment is designed for the detailed study of in-plane deformation of portal-type structures under various loads. It is supplied with two types of frames: a "U"-shaped frame and a gable roof frame, allowing for the simulation and analysis of different structural conditions.

The equipment features an advanced fixed support system and an articulated sliding support, ensuring secure and precise fixation of the structures during testing.

To measure deformation at various points of the structure, at least one ST.Z.02 displacement measurement system is required. It is recommended to use at least two measurement systems.

Additionally, to apply loads at different points on the structure, the ST.Z.01 loading system is essential, ensuring controlled and uniform distribution of the applied forces.

DIKOIN Ingeniería S.L.U.
+034 946 55 15 35 / www.dikoin.com / info@dikoin.com

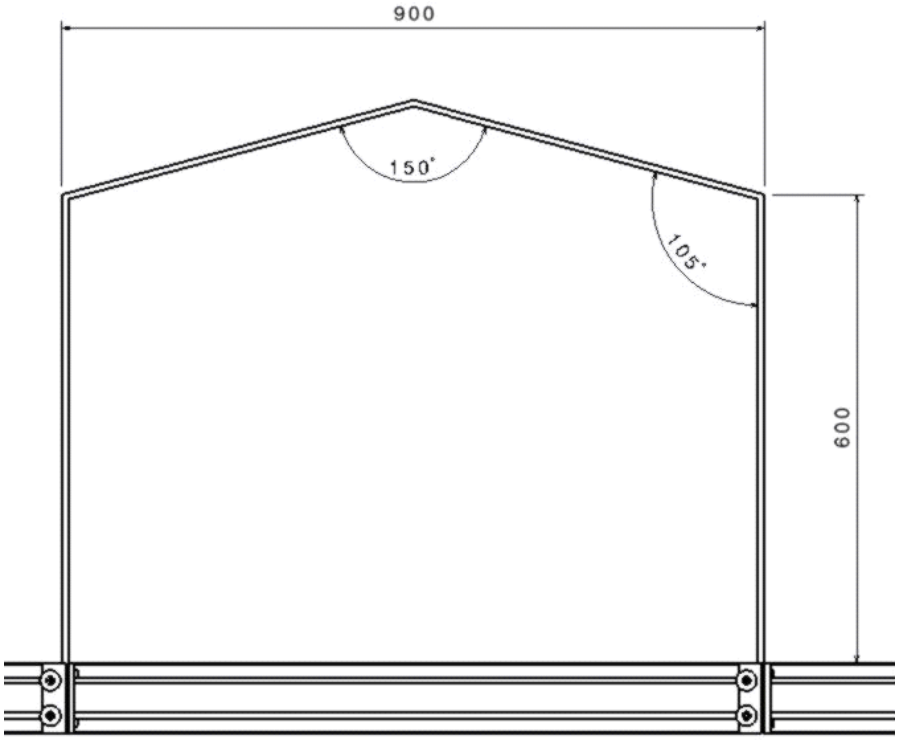

Detail of the pitched-roof frame.

View of the assembled pitched-roof frame.

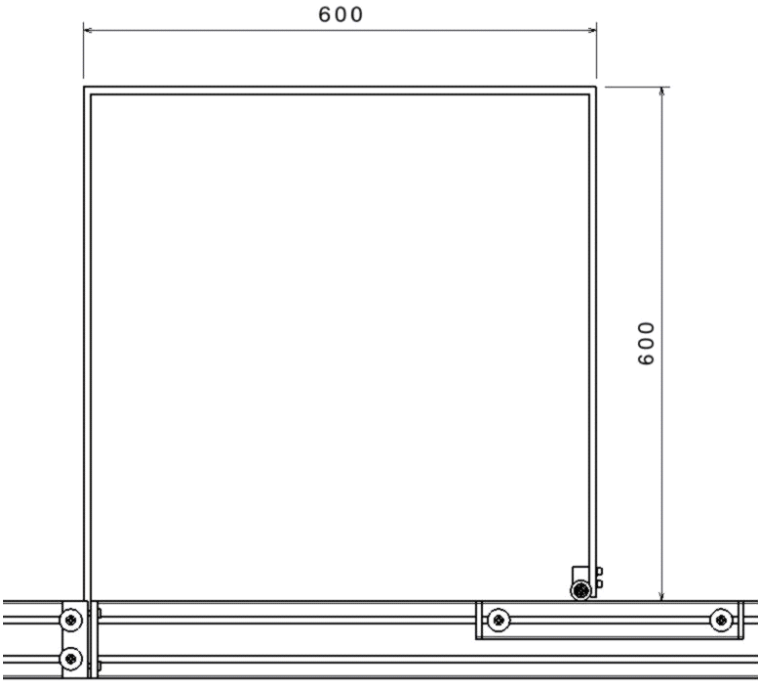

Detail of the simple frame.

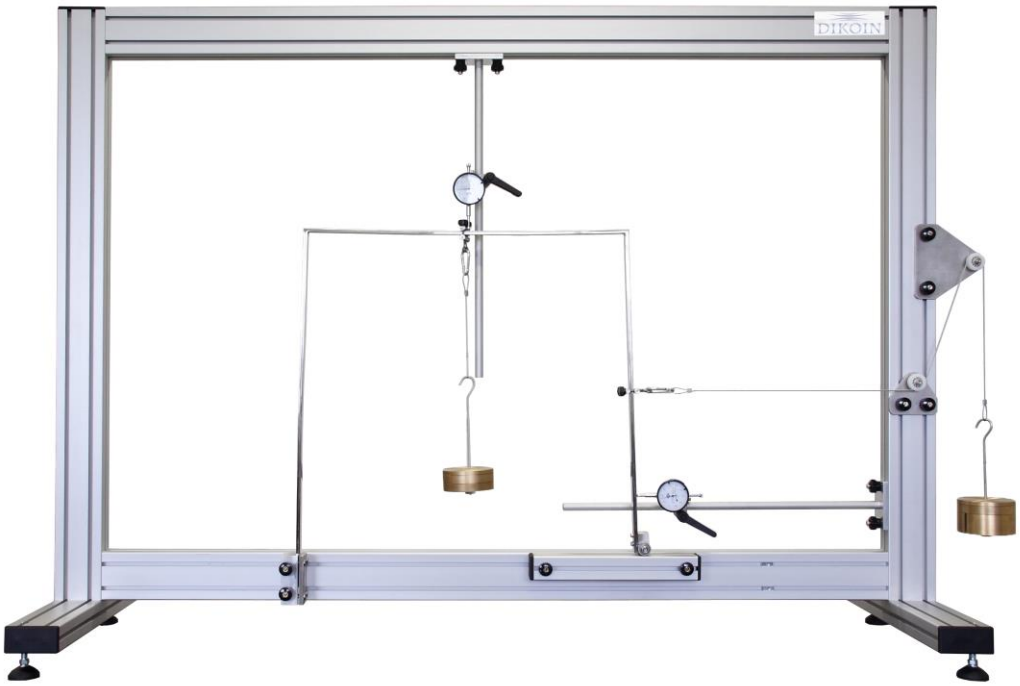

View of the assembled simple frame.

Detail of the fixed-end support. Quick installation without the need for tools.

Detail of the sliding support. Quick installation without the need for tools.

Required Accessory: ST.Z.01 - WEIGHT SYSTEM FOR ST SERIES
Weights system, with maximum load of 12 kg. Includes weights with different masses from 0,5 to 2,5 kg.

This item is used with the ST range, with the frame for flat structures.

The system has 2 flanges for 20 mm profile, 2 hooks and 8 weights. The hook doesn`t need to be unassembled to change the weight.

TECHNICAL DATA

- Material: Bronze
- Minimum precision of the weight: ± 2%
- Units and mass:
    - 3x 2.5 kg
    - 3x 1 kg
    - 2x 0.5 kg
- 2x Stainless steel hooks for weight placement.

ST 01.2 - FRAME STUDY

Required Accessory: ST.Z.02 - DISPLACEMENT MEASUREMENT SYSTEM FOR ST SERIES
This is a displacement measurement system designed to be used with the ST series and to be mounted on a flat-structure frame. This accessory is composed by a pole (see top half of the image with 2 samples) that gets easily inserted into the frame of the ST 01.1 (not included), equipped with a gauge whose hand shows the range of displacement that has occurred from the starting point.

The gauge can be easily moved up and down all along the pole and it is adjusted with a hand-operated lever.

TECHNICAL DATA

- Displacement measurement system with a gauge.
- Reading scale range: 0 - 25 mm
- Scale intervals: 0,01mm

ST 01.2 - FRAME STUDY

LEARNING OBJECTIVES

- Study of the deformation of frames in the U form and two waters.
- Support study:
  - Embedment
  - Sliding articulated support
- Comparison between calculated and measured displacements.
- Application of the superposition principle.

TECHNICAL DATA

Frames

- Material: Polished AISI 304 Stainless Steel
- Profile: 20x8 mm
- Yield Strength: 310 MPa (45 KSI)
- Tensile Strength: 620 MPa (90 KSI)
- Modulus of Elasticity: 200 GPa (29000 KSI)
- Density: 7.8 g/cm³ (0.28 lb/in³)

Cable Return Pulleys

- Configuration: Includes 2 cable return pulleys with different-sized plates.

Cables

- Material: Stainless Steel
- Lengths:
  - 1x 200 mm
  - 1x 500 mm
  - 1x 1 m

Load Placement Clamps

- Quantity: 2 clamps
- Material: Stainless Steel

Fixed Supports

- Configuration: 2 fixed supports with anti-rotation system
- Fastening: Screws with knurled nuts, no additional tools required

Sliding Support

- Design: Sliding support with aluminum profile and bearings for minimal friction
- Fastening: Screws with knurled nuts, no additional tools required

REQUIREMENTS

- Required Frame: The ST 01.1 frame is essential for the proper operation of this equipment.
- Displacement Measurement System: At least one ST.Z.02 system is required, though it is recommended to use two.
- Weight System: The ST.Z.01 weight system is necessary for applying loads to the structure.
- Measuring Tool: A meter or ruler is required to measure distances between the studied points.